- Rim locks
  - 夹口
- Made from nickel silver or titanium
  - 白铜或钛材料制造
- 2 standard widths
  - 2个标准宽度
- Available with OBE safety rimlock screw (ISS) for optimum hold
  - 有配套OBE ISS夹口套胶螺丝

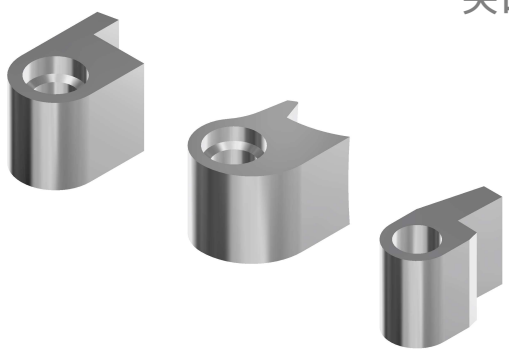

**Profile: A nickel silver– 白铜A型**

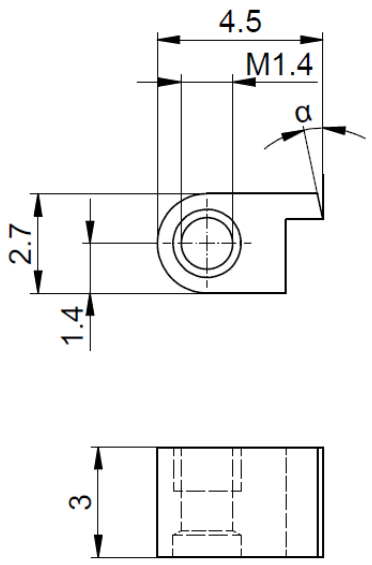


**Profile: B titanium– 钛B型**

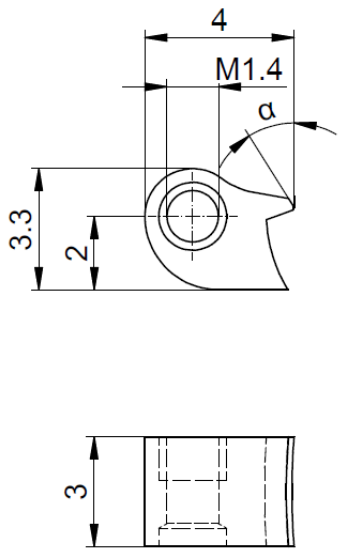


**Profile: C nickel silver– 白铜C型**

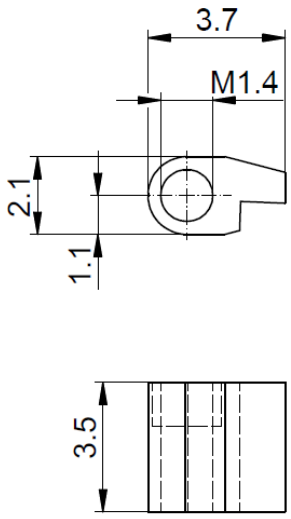


| Width 宽度 | Profile 类型 | Angle (α) 角度 | Article No. 配件编号 | Safety rimlock Screw 夹口套胶螺丝 |
|---|---|---|---|---|
| 3.0 mm | A | 0 | 64-02745.177.1X | 99-01542 |
| | | 5 | 64-02745.122.1X | |
| | | 10 | 64-02745.158.1X | |
| | | 15 | 64-02745.157.1X | |
| | B titanium | 0 | 64-22640.102.1X | |
| | | 5 | 64-22640.104.1X | |
| | | 10 | 64-22640.106.1X | |
| | | 15 | 64-22640.108.1X | |
| 3.5 mm | C | 0 | 64-02137.104.1X | 99-01545<br>99-01601 |